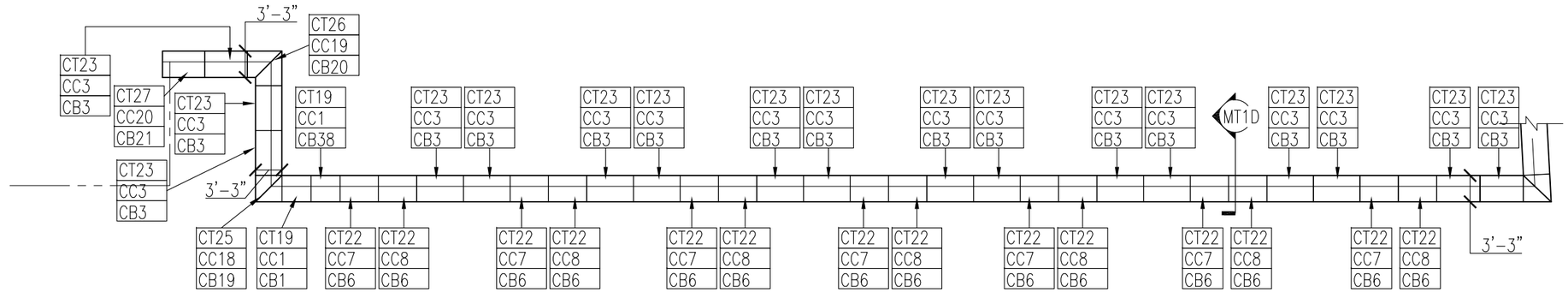

CORNICE COPING LAY OUT

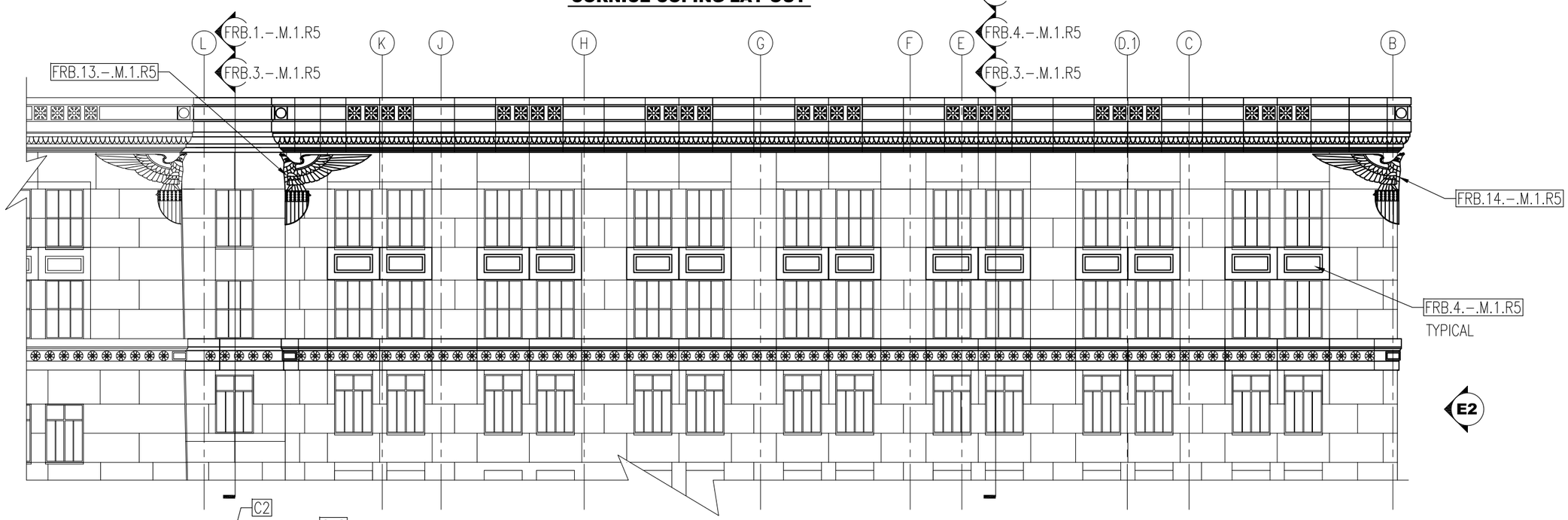

PARTIAL ELEVATION

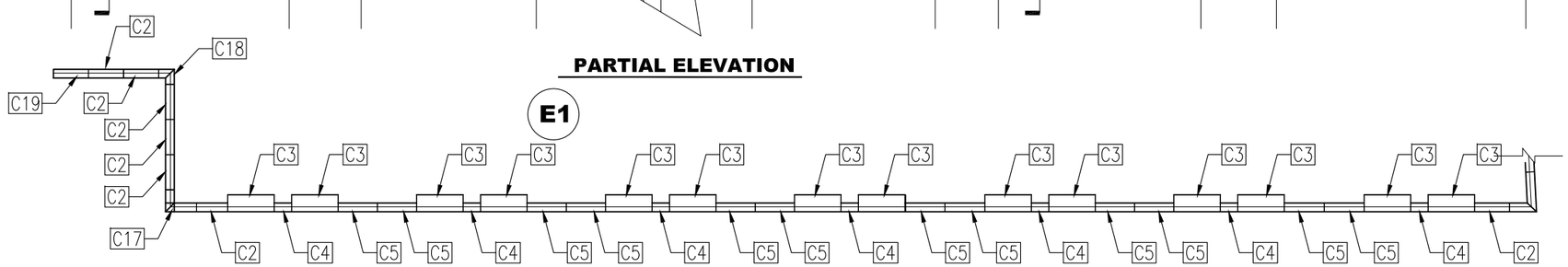

CORNICE LAY OUT

ALL RIGHTS RESERVED. THIS DRAWING IS PROPERTY OF STROMBERG ARCHITECTURAL PRODUCTS INC. AND MAY BE USED ONLY WHEN UTILIZING STROMBERG ARCHITECTURAL PRODUCTS. STROMBERG ARCHITECTURAL PRODUCTS INC. GENERAL TERMS AND CONDITIONS APPLY AND ARE INCORPORATE HERE IN BY REFERENCE. THIS DETAIL MAY NOT APPLY TO ALL CONDITIONS AND CONSTRUCTION SITUATIONS.

STROMBERG ARCHITECTURAL PRODUCTS INC.
4400 Oneal Street, Greenville, TX 75401 Phone 903.454.0904 Fax 903.454.3642

TITLE: FEDERAL RESERVE	TYPE DWG: SETTING PLAN 1
SCALE: AS NOTED	DWG. SHEET: **FEDERAL SP1**